Chilisin Electronics Singapore Pte Ltd

SMD Shielded Power choke, TSD Series

Ordering Code:

TSD - 0502 - 2R2 - M

- TSD → Type
- 0502 → Size
- 2R2 → Inductance
- M → Tolerance

Dimension in mm:

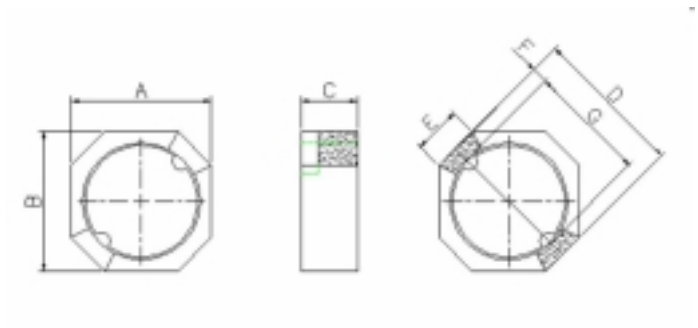

	TSD - 0502
A	5.3 Max.
B	5.3 Max..
C	2.0 Max.
D	5.4 ± 0.2
E	1.6
F	0.5
G	4.2
Weight	0.23g typ.

Electrical:

PART NO.	Inductance (µH) ±20%	Test Frequency	RDC (mΩ) MAX.	Idc (A)	Current ΔT=40°C Typ. (A)
TSD-0502-1R2-□	1.2	100 KHz	44	2.15	2.87
TSD-0502-2R2-□	2.2		59	1.63	2.05
TSD-0502-3R5-□	3.5		73	1.34	1.81
TSD-0502-4R7-□	4.7		87	1.14	1.53
TSD-0502-6R8-□	6.8		105	0.95	1.37
TSD-0502-100-□	10		150	0.76	1.09
TSD-0502-150-□	15		210	0.63	0.90
TSD-0502-220-□	22		275	0.56	0.82
TSD-0502-330-□	33		455	0.44	0.60
TSD-0502-470-□	47		730	0.35	0.44
TSD-0502-680-□	68		935	0.30	0.41
TSD-0502-101-□	100		1500	0.23	0.31

Next Back